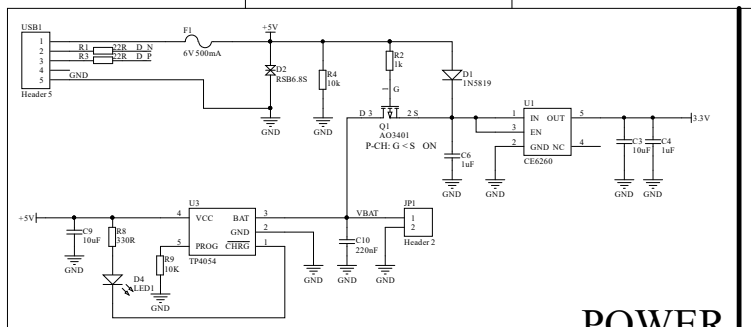

POWER

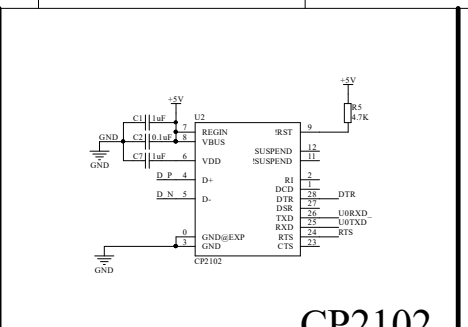

CP2102

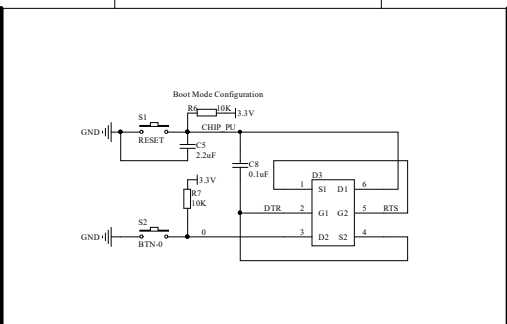

Auto-Reset

Boot Mode Configuration			
Pin	Default	Boot	Download
GPIO0	1	1	0
U0TXD	1	1	x
GPIO2	0	x	0
GPIO4	0	x	x
MTDO	1	x	x
GPIO5	1	1	x
If U0TXD, GPIO2, GPIO5 are floating, GPIO0 determines boot mode			

If DTR is LOW, toggling RTS from HIGH to LOW resets to run mode.

If RTS is HIGH, toggling DTR from LOW to HIGH resets to bootloader.

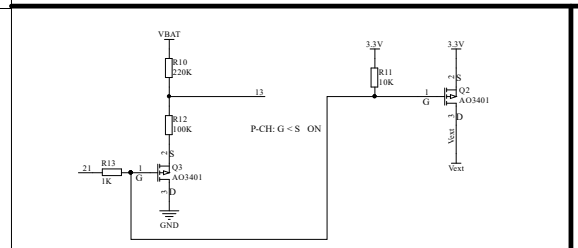

LiPo electtricity & Vext

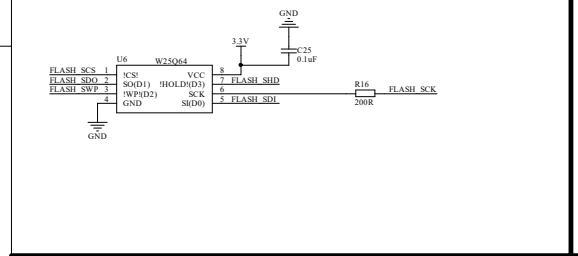

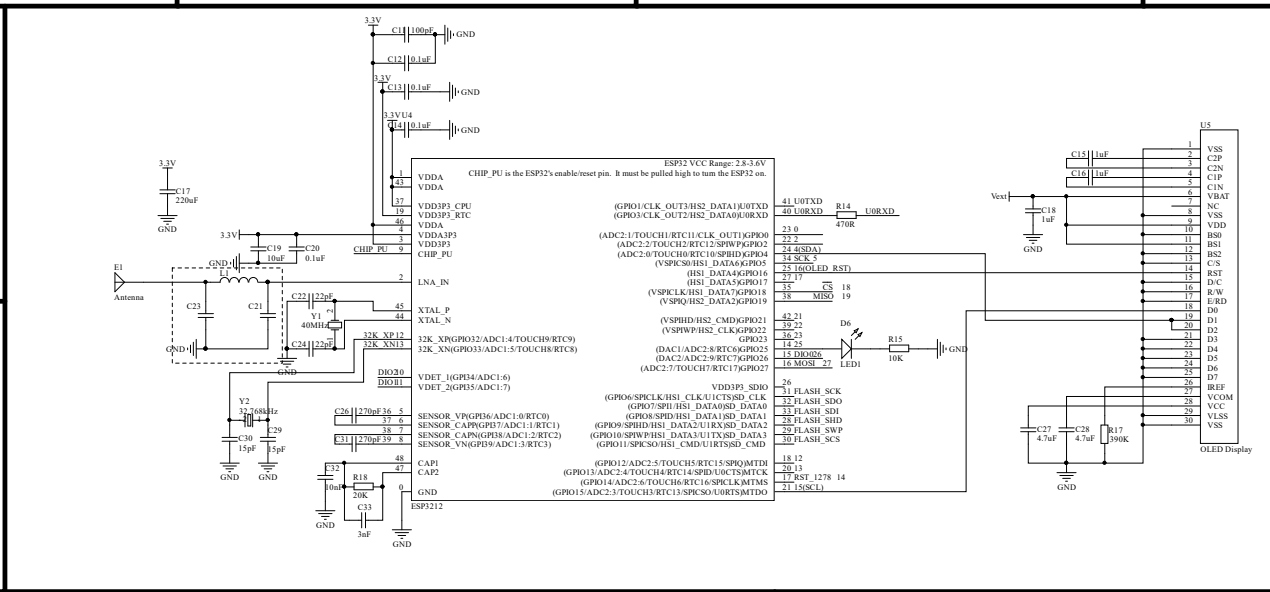

MCU

SX1276

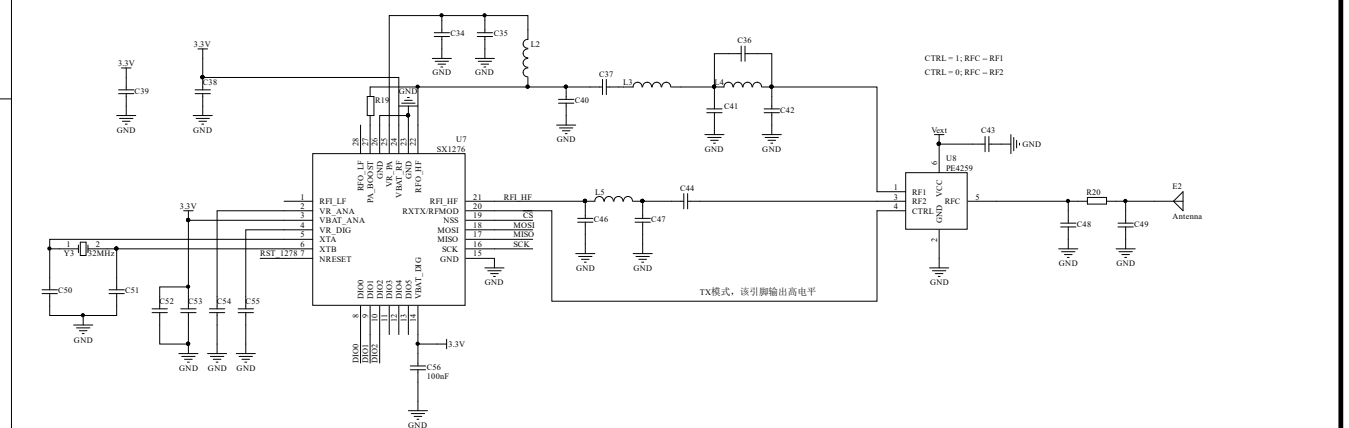

Header

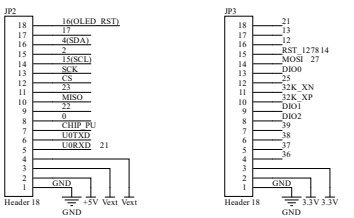

Heltec Automation